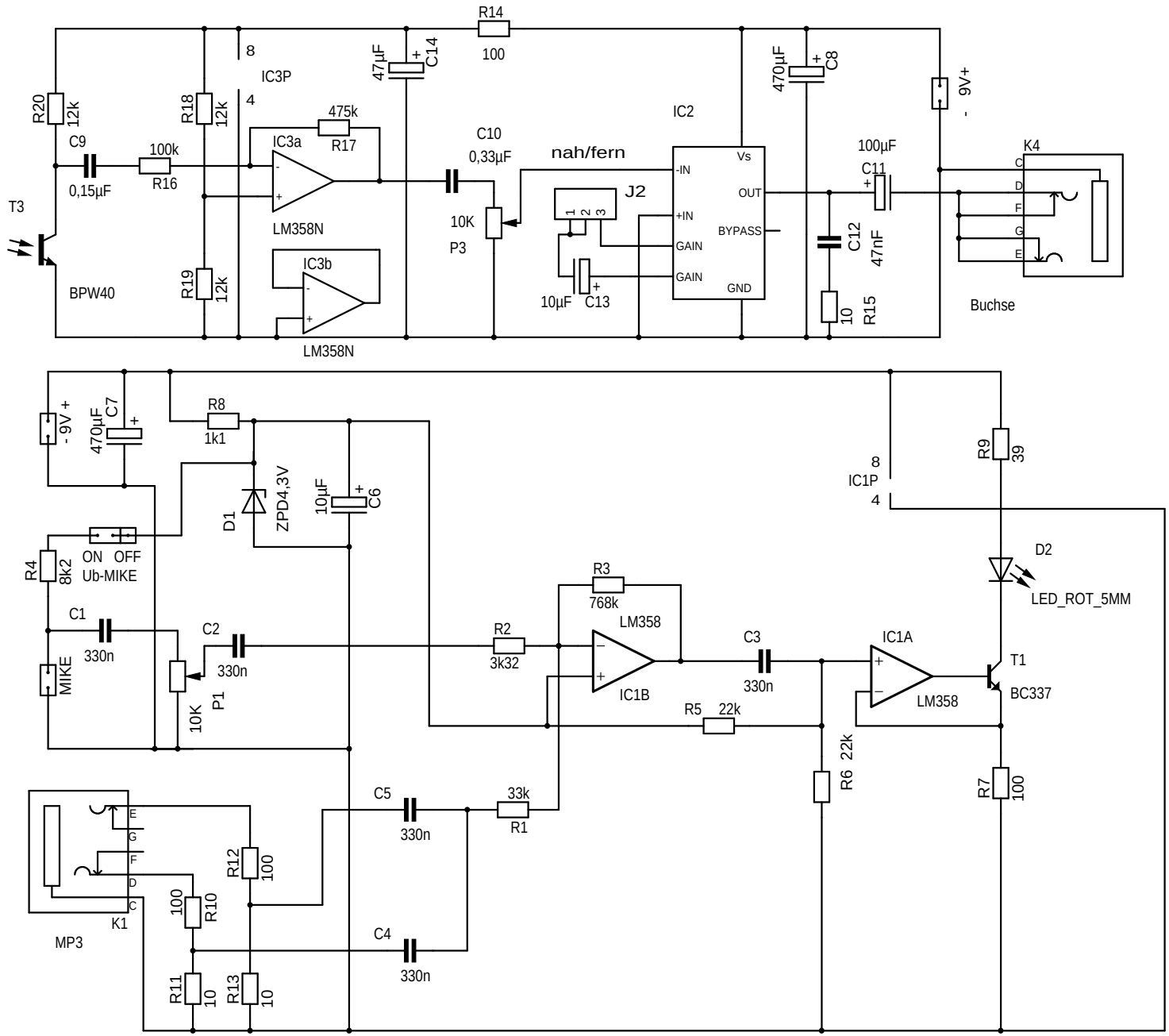
R14
100
8
IC3P
4
47µF
C14
470µF
C8
- 9V+
R20
12k
R18
12k
475k
R17
IC3a
C9
100k
0,15µF
R16
C10
0,33µF
nah/fern
IC2
Vs
-IN
OUT
+IN
BYPASS
GAIN
GAIN
GND
J2
100µF
C11
K4
C
D
F
G
E
T3
LM358N
10K
P3
10µF
C13
C12
47nF
10
R15
Buchse
BPW40
R19
12k
IC3b
LM358N
- 9V +
470µF
C7
R8
1k1
D1
ZPD4,3V
10µF
C6
8
IC1P
4
R9
39
D2
LED_ROT_5MM
R4
8k2
ON OFF
Ub-MIKE
R3
768k
LM358
C1
330n
C2
330n
R2
3k32
IC1B
C3
330n
IC1A
T1
BC337
MIKE
10K
P1
R5
22k
LM358
R6
22k
R7
100
C5
330n
33k
R1
E
G
F
D
C
K1
MP3
R12
100
100
R10
C4
330n
R11
10
R13
10

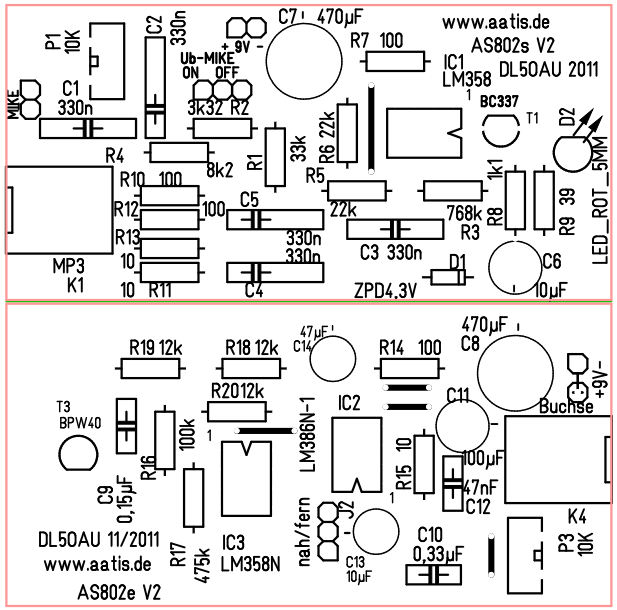
www.aatis.de
AS802s V2
DL5OAU 2011
P1
10K
C2
330n
C7
470µF
R7 100
IC1
LM358
BC337
T1
D2
LED_ROT_5MM
MIKE
C1
330n
+9V -
Ub-MIKE
ON OFF
3k3Z R2
R4
8k2
R1
33k
R6 22k
R5
22k
768k
R3
1k1
R8
R9 39
R10 100
R12
100
R13
10
10 R11
C5
330n
330n
C4
C3 330n
D1
ZPD4,3V
C6
10µF
MP3
K1
R19 12k
R18 12k
C14
47µF
R14 100
C8
470µF
R2012k
IC2
LM386N-1
C11
100µF
Buchse
+9V-
T3
BPW40
R16
100k
C9
0,15µF
R15 10
47nF
C12
R17
475k
IC3
LM358N
nah/fern
J2
C13
10µF
C10
0,33µF
K4
P3
10K
DL5OAU 11/2011
www.aatis.de
AS802e V2